SUPREME HEATING
POOL HEATING SINCE 1990

VProPlus

Inverter Pool Heat Pump

INSTALLATION, OPERATION & WARRANTY MANUAL

SUMMARY

FOR USERS ……..... P.3-P.13

1. GENERAL INFORMATION 3
   1.1. Contents 3
   1.2. Operating conditions and range 3
   1.3. Advantages of different modes 4
   1.4. Kind reminder 4
2. OPERATIONS 6
   2.1. Notice before using 6
   2.2. Operation instructions 6
   2.3. Advanced application 11
   2.4. Daily maintenance and winterizing 12
3. TECHNICAL SPECIFICATION 13

FOR INSTALLERS AND PROFESSIONALS …….. P.14-P.30

1. TRANSPORTATION 14
2. INSTALLATION AND MAINTENANCE 14
3. TROUBLE SHOOTING FOR COMMON FAULTS 19
4. FAILURE CODE 20

APPENDIX 1: HEATING PRIORITY WIRING DIAGRAM (OPTIONAL) 21

APPENDIX 2: HEATING PRIORITY WIRING DIAGRAM (OPTIONAL) 22

APPENDIX 3: HEATING PRIORITY WIRING DIAGRAM (OPTIONAL) 23

5. WI-FI SETTING 24
6. VORTEX LINK 31
7. VORTEX SWITH 32
8. WARRANTY 34

PLEASE READ IT CAREFULLY AND KEEP IT FOR SUBSEQUENT USE

This manual provides you necessary information for optimal use and maintenance

This appliance is not intended for use by persons (including children) with reduced physical, sensory or mental capabilities, or lack of experience and knowledge, unless they have been given supervision or instruction concerning use of the appliance by a person responsible for their safety.

Warning

a. Please read the following tips before installation, use and maintenance.
b. Installation, removal and maintenance must be carried out by Professional in accordance with the instructions.
c. Gas leakage test must be done before and after installation.

1. Use

a. It must be installed or removed by professionals, and it is forbidden to dismantle and refit without permission.
b. Don't put obstacles before the air inlet and outlet of the heat pump.

2. Installation

a. This product must be kept away from any source of fire.

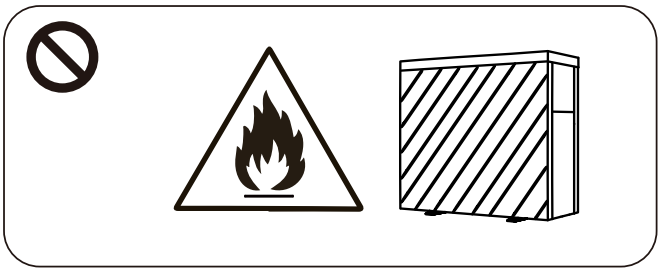

b. The installation can't be in a closed environment or indoors, and must be kept well ventilated.

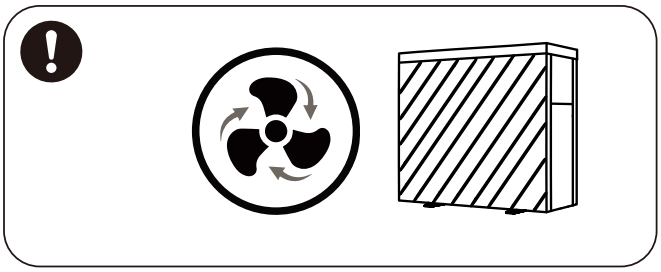

c. Vacuum completely before welding, field welding is not allowed, welding can only be performed by professional personnel in professional maintenance center.

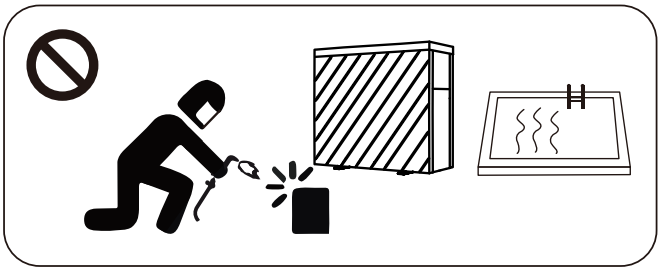

d. Installation must be stopped if any gas leakage, and the unit must be returned to professional maintenance center.

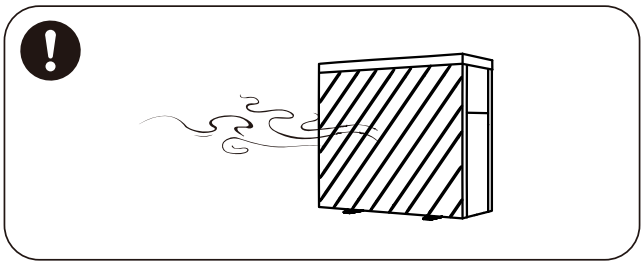

3. Transportation and Storage

a. Sealing is not allowed during transportation
b. Transporting goods at a constant speed is needed to avoid sudden acceleration or sudden braking, so as to reduce the collision of goods.
c. The unit must be far away from any source of fire.
d. Storage place must be bright, wide, open and good ventilation, ventilation equipment is required.

4. Maintenance Notice

a. If maintenance or scrap is required, contact an authorized service center nearby
b. Qualification requirement
   All operators who dispose gas must be qualified by valid certification which issued by professional agency.
c. Please strictly comply with the requirement from manufacturer when maintenance or filling gas. Please refer to the technical service manual.

1. GENERAL INFORMATION

1.1. Contents

After unpacking, please check if you have all the following components.

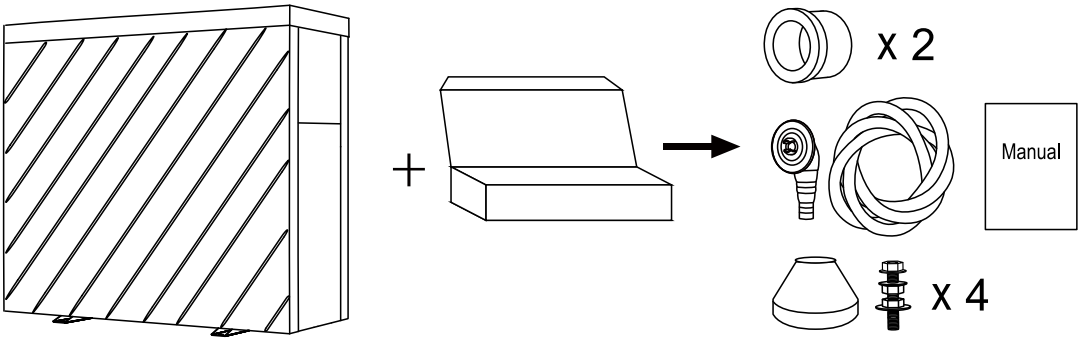

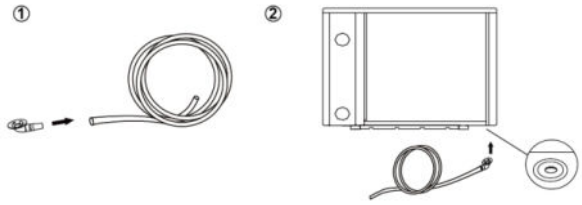

NOTICE:
Please install the water unions step by step.

1.2. Operating conditions and range

ITEMS		RANGE
Operating range	Air temp	-20°C～43°C / -4°F～109°F
Temp. setting	heating	18°C～40°C / 64°F～104°F
	Cooling	12°C～30°C / 54°F～86°F

The heat pump will have ideal performance in the operation range Air 15°C～25°C / 59°F ~77°F.

1.3. Advantages of different modes

The heat pump has three modes: Turbo, Smart and Silence. They have different advantages under different conditions.

MODE	ADVANTAGES
Turbo mode	Heating capacity: 120%~20% Fast heating, intelligent optimization according to ambient temperature and water temperature Energy efficiently saving
Smart mode	Heating capacity:100%~20% Intelligent optimization according to ambient temperature and water temperature Energy efficiently saving
Silence mode	Heating capacity: 60%~20% Use at night

1.4. Kind reminder

⚠ In case of power failure during the operation of the machine, the machine will automatically restart when the power is restored.

1.4.1. The heat pump can only be used to heat the pool water. It can NEVER be used to heat other flammable or turbid liquid.

1.4.2. Don't lift the water unions when moving the heat pump since the titanium heat exchanger inside the heat pump will be damaged.

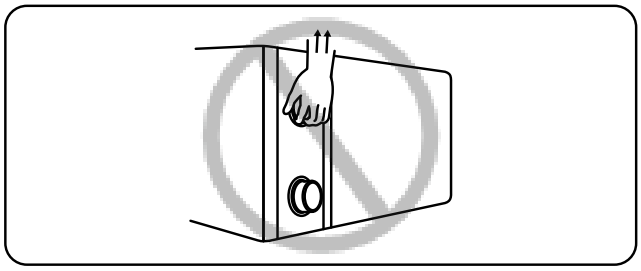

1.4.3. Don't put obstacles before the air inlet and outlet of the heat pump.

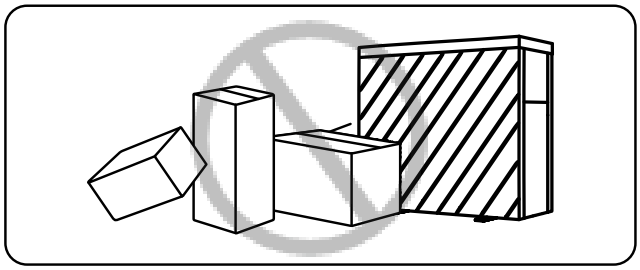

1.4.4. Do not put anything into the inlet or outlet, and do not remove the fan cover and the running fan to avoid injury.

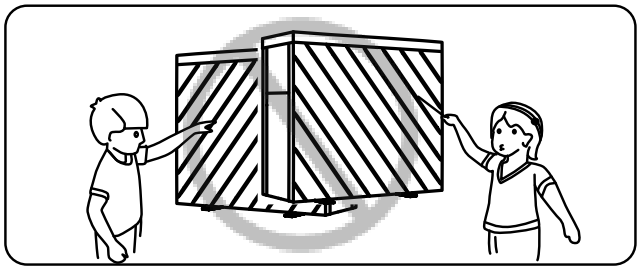

1.4.5. Don't use or store combustible gas or liquid such as thinners, paint and fuel to avoid fire.

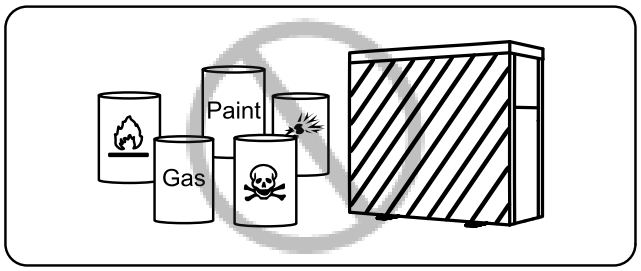

1.4.6. If any abnormal circumstances occurred, e.g.: abnormal noises, smells, smokes and leakage of electricity, switch off the main power immediately and contact your local dealer. Don't try to repair the heat pump by yourselves.

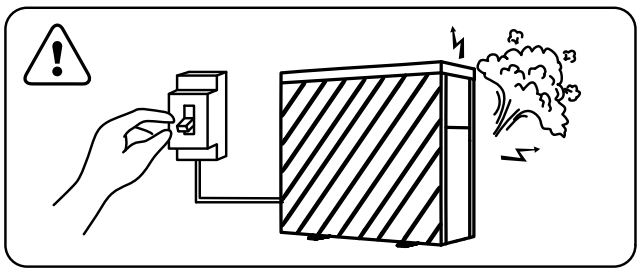

1.4.7. The main power switch should be out of the reach of Children.

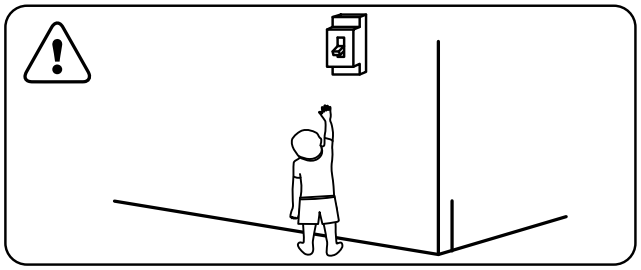

1.4.8. Please cut off the power in the lightning storm weather.

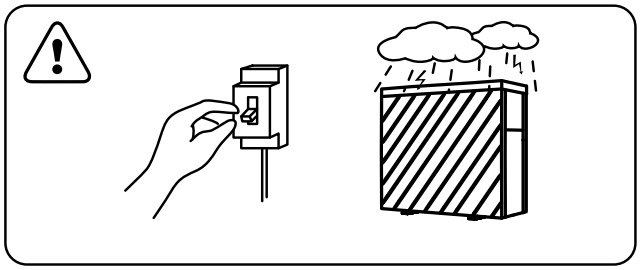

1.4.9. Please note that the following codes are not failure.

	CODES
No water protection	E3
Anti-Freezing Protection	Ed
Out of the operating range	Eb
Insufficient water flow protection	E6
Power abnormal	E5

2. OPERATIONS

2.1. Notice before using

2.1.1. For longer service life, please ensure water pump is on before heat pump starts to work, and water pump is off after heat pump is off.

2.1.2. Ensure no water leakage on piping system, then unlock screen and power on heat pump.

2.2. Operation instructions

SYMBOL	DESIGNATION	FUNCTION
⏻	ON/OFF	1. Power On/Off 2. Wi-Fi setting
🔒	Unlock	1. Press it for 3 seconds to unlock/lock screen 2. After screen is unlocked, press it to select mode. Auto 12~40°C / 54°F～104°F Heating 18~40°C / 64°F～104°F Cooling 12~30°C / 54°F～86°F

FOR USERS

	Speed	Select Turbo/Smart/Silence mode
+ _	Up / Down	Adjust set temperature
	Timer	Time and timer setting

Note: will be light all the time when power is on.

① Standby screen display:

When the screen is locked, the key lamp will be off.

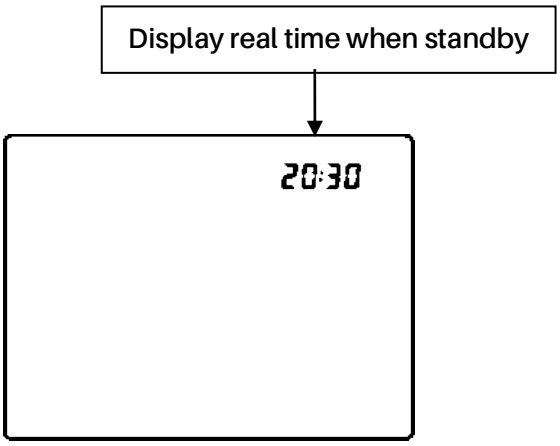

② Screen lock:

a. If no operation in 30 seconds, screen will be locked.

b. When HP is off, screen will be dark and “0%” or “0.00kW” will be displayed.

c. Press for 3 seconds to lock screen and it will be dark.

③ Screen unlock:

a. Press for 3 seconds to unlock screen and it will be lit up.

b. Only after screen is unlocked, any other buttons can be functioned.

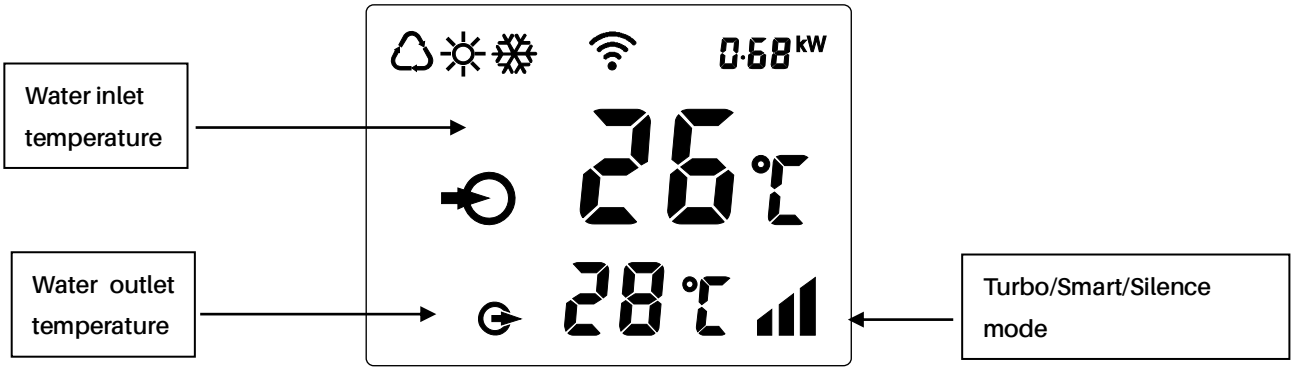

	Auto
	Heating
	Cooling

80 %	Heating capacity percentage
0.68 kW	Real-time power consumption display
	Wi-Fi connection
	Water inlet
	Water outlet

1. Power On: Press for 3 seconds to light up screen, then press to power on heat pump.
2. Adjust Set Temperature: When screen is unlocked, press + or — to display or adjust the set temperature.
3. Switching of real-time power consumption and heating capacity percentage display：Press and + 5 seconds to switch between real-time power consumption display and heating capacity percentage display. Real-time power consumption function available for single-phase only.
4. Mode Selection: Press to select mode.

   Auto : adjustable temperature range 12~40°C / 54°F～104°F

   Heating : adjustable temperature range 18~40°C / 64°F～104°F

   Cooling : adjustable temperature range 12~30°C / 54°F～86°F
5. Turbo/Smart/Silence mode selection:

   Press to enter Turbo mode, and screen shows , then press to enter Silence mode, the screen shows . Press again, the screen shows and return to Smart mode.
6. Timer

   The timer function is a 24-hour system, please calibrate with local time.

a. Real time setting: Press for 5 seconds to enter real time setting, press + or — to adjust the hour. After completion, press switch to minute setting. And then press to confirm. During real time setting, you can press once to cancel the setting.

b. Time display

   When the machine is off, the time display on the top right corner is real time.

   When the machine is on, the real time can be shown 10 seconds if you press timer once.

c. Timer setting

Press for 10 seconds and release when you hear the "beep" sound to enter the timer setting.

(1) Timer on setting, 1 will be flashing.

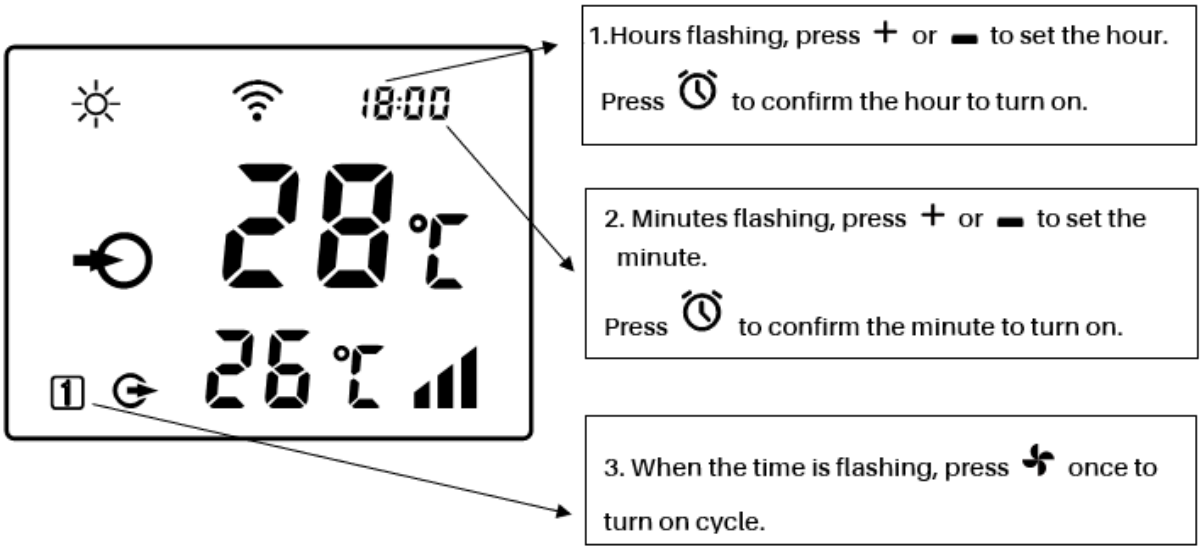

Finally, press once to confirm timer on setting.

The icon in the lower left corner indicates as below:

1	Timer on every day
1	Timer on one time
No symbol	No timer setting

(2) Timer off setting, 0 will be flashing.

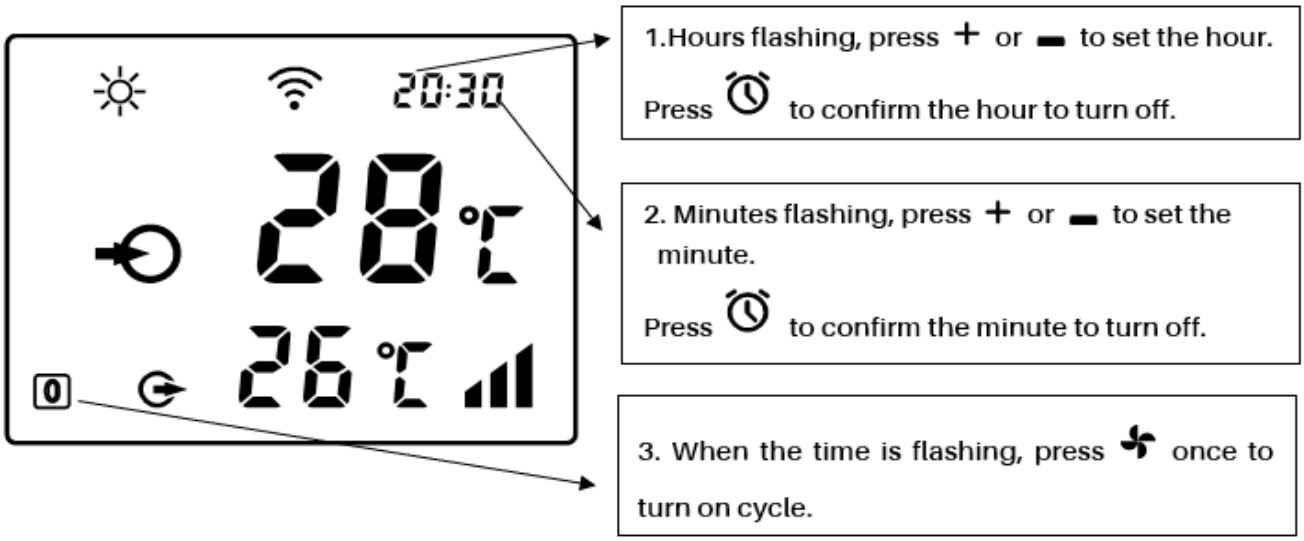

Finally, press once to confirm timer off setting.

The icon in the lower left corner indicates as below:

0	Timer off every day
0	Timer off one time
No symbol	No timer setting

(3) After setting, the icon in the lower left corner indicates as below:

0 1	Timer on every day	Timer off every day
1 and 0 alternate display	Timer on every day	Timer off one time
1	Timer on every day	No timer off
0 and 1 alternate display	Timer on one time	Timer off every day
0	No timer on	Timer off every day
0 1	Timer on one time	Timer off one time
1	Timer on one time	No timer off
0	No timer on	Timer off one time
No symbol	No timer on	No timer off

7. Defrosting

a. Auto Defrosting: When heat pump is defrosting, will be flashing. After defrosting, will stop flashing.

b. Compulsory Defrosting: When heat pump is heating, press and — together for 5 seconds to start compulsory defrosting, and will be flashing. After defrosting, will stop

flashing.

Note: Compulsory defrosting intervals should be more than 30 minutes and the compressor should run for more than 10 minutes at heating mode.

8. Temperature display conversion between °C and °F:

   Press " + " and " — " together for 5 seconds to switch between °C and °F.

9. Wi-Fi setting

   Please kindly check the last page.

2.3. Advanced application

2.3.1. Parameter Checking

a. Press and + together for 5 seconds to enter "Parameter Checking" status, the parameter code "P0" and the parameter value "0" will display on the screen, such as "P0 0", which means water pump running way is continuous.

b. In "Parameter Checking" status, press + or — to check the parameters.

2.3.2. Parameter Modification

In "Parameter Checking" status, press to enter the "Parameter Modification" mode, press + or — to change the values, then press to confirm and quit "Parameter Modification" mode, press to quit "Parameter Checking" status.

2.3.3. Parameter list

NO.	Content	Adjust range	Step length
P0	Water Pump Running Way	0: Continuous 1: Water temp control 2: Time/water temp control	1
P1	Time Setting (Only available when the water pump running way is set to "2")	10 ~ 120 min	5 min
P2	Compressor Continuously Running Time between Defrosting Mode	30 ~ 90 min	1 min
P3	Defrosting Entry Temp	-17~0°C / 1~32°F	1°C /1°F
P4	Maximum Defrosting Running Time	1 ~ 12 min	1 min
P5	Defrosting Exit Temp	8~30°C /46~86°F	1°C /1°F

2.3.4. Running status checking

Press for 5 seconds, enter into "Running status checking", and the screen alternately shows status point "C0" and its corresponding value. Check all status points and their corresponding value through + or —, Press to quit "running status checking" mode.

Running status checking list

Symbol	Content	Unit
C0	Inlet water temp.	°C / °F
C1	Outlet water temp.	°C / °F
C2	Ambient temp.	°C / °F
C3	Exhaust temp.	°C / °F
C4	Outer coil pipe temp. (Evaporator)	°C / °F
C5	Gas return temp.	°C / °F
C6	Inner coil pipe temp. (Titanium heat exchanger)	°C / °F
C9	Cooling plate temp.	°C / °F
C10	Electronic expansion valve opening	P
C11	DC fan speed	(r/min)

2.4. Daily maintenance and winterizing

2.4.1. Daily Maintenance

⚠ Please don't forget to cut off power supply of the heat pump

- Please clean the heat pump with household detergents or clean water, NEVER use gasoline, thinners or any similar fuel.
- Check bolts, cables and connections regularly.

2.4.2. Winterizing

In winter season when you don't swim, please cut off power supply and drain water out of the heat pump. When using the heat pump under 2°C / 36°F, make sure there is always water flow.

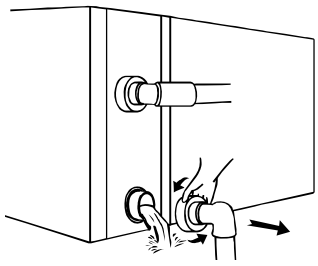

⚠ Attention

Unscrew the lower water union of inlet pipe to let the water flow out. When the water in machine freezes in winter season, the titanium heat exchanger may be damaged.

3. TECHNICAL SPECIFICATION

Model	VPROPLUS 11	VPROPLUS 14	VPROPLUS 18	VPROPLUS 21	VPROPLUS 26	VPROPLUS 32	VPROPLUS 40T
Advised pool volume (m^3)	25~40	30~50	40~65	45~75	55~90	65~105	75~120
Working air temp (°C / °F)	-20 ~43 / -4 ~109						
Performance Condition: Air 26°C / 80°F, Water 26°C / 80°F, Humidity 80%							
Heating capacity (kW) in Turbo mode	11	13.5	18	21.5	26	31.5	40
Heating capacity (kW) in Smart mode	8.5	11.5	15	17.6	22	27	35
COP	20~7.3	19.6~7.5	19.2~7.1	20.5~7.2	20.3~7.2	19.6~7.4	19.8~7.2
COP at 50% capacity	14.7	14.9	14.6	15	15	14.8	14.7
COP at 20% capacity	20	19.6	19.2	20.5	20.3	19.6	19.8
Performance Condition: Air 15°C / 59°F, Water 26°C / 80°F, Humidity 70%							
Heating capacity (kW) in Turbo mode	7.3	9	12	14.5	18	22	28.5
Heating capacity (kW) in Smart mode	6.1	7.3	10	12	14.8	18	24
COP	8.5~5.5	7.9~5.2	8.0~5.0	8.8~5.2	9.3~5.3	8.1~5.3	8.0~4.9
COP at 50% capacity	7.3	7.2	7.2	7.4	7.8	7.4	7.4
COP at 20% capacity	8.5	7.9	8	8.8	9.3	8.1	8
Performance Condition: Air 7°C / 45 °F, Water 26°C / 80°F, Humidity 90%							
Heating capacity (kW) in Turbo mode	6.5	7.2	10.3	11.6	15.2	17.5	22.3
COP	7.0~4.8	6.9~4.5	6.9~4.3	7.2~4.4	7.1~4.6	7.1~4.6	7.0~4.3
Performance Condition: Air 35°C / 95°F, Water 28°C / 82°F, Humidity 80%							
Cooling capacity (kW)	5	6.3	10	11.3	13	15	19.5
Sound pressure at 1m dB(A)	37.7~44.8	37.8~45.9	41.5~47.3	41.9~49.5	39.7~49.8	42.1~50.3	41.5~50.5
Sound pressure of 50% capacity at 1m dB(A)	38.8	40.3	42.5	43.3	43.1	45.2	42.5
Sound pressure at 10m dB(A)	17.7~24.8	17.8~25.9	21.5~27.3	21.9~29.5	19.7~29.8	22.1~30.3	21.5~30.5
Power supply	230V /1 Ph / 50Hz						400V/3 Ph/50Hz
Rated input power (kW) at air 15°C / 59°F	0.15~1.38	0.19~1.7	0.25~2.45	0.27~2.74	0.32~3.31	0.46~4.1	0.60~5.7
Rated input current (A) at air 15°C / 59°F	0.65~6.00	0.83~7.39	1.09~10.65	1.17~11.9	1.39~14.4	2.01~17.8	0.87~8.22
Advised water flux (m^3/h)	2~4	3~4	4~6	6.5~8.5	8~10	10~12	12~18
Water pipe in-out Spec (mm)	48.3						
Net Dimension L × W × H (mm)	EψχëAËχëBДχ	EAБëAËχëBДχ	ψχAБëAËχëBГχ	ψωχχëAËχëГГχ	ψχГχëБAχëEББ	ψωBБëБAχëEББ	ψËBБëБAχëEББ
Net Weight (kg)	63	65	73	82	100	122	147

- The values indicated are valid under ideal conditions: Pool covered with an isothermal cover, filtration system running at least 15 hours a day.
- Related parameters subject to adjustment periodically for technical improvement without further notice. For details please refer to nameplate.

1. TRANSPORTATION

1.1. When storing or moving the heat pump, the heat pump should be at the upright position.

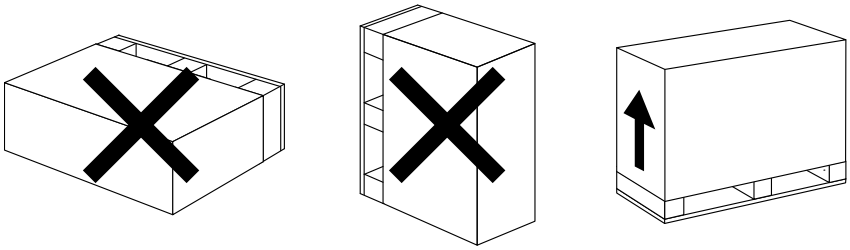

1.2. When moving the heat pump, do not lift the water unions since the titanium heat exchanger inside the heat pump will be damaged.

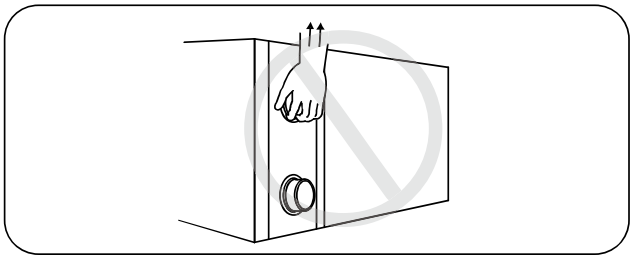

2. INSTALLATION AND MAINTENANCE

⚠ The heat pump must be installed by a professional team. The users are not qualified to install by themselves, otherwise the heat pump might be damaged and risky for users' safety.

2.1. Notice before installation

2.1.1. The inlet and outlet water unions can't bear the weight of soft pipes. The heat pump must be connected with hard pipes!

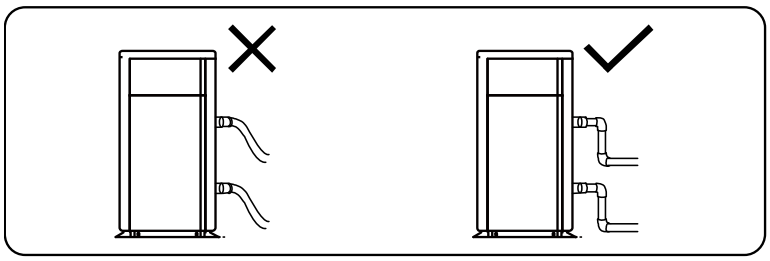

2.1.2. In order to guarantee the heating efficiency, the water pipe length should be ≤10m between the pool and the heat pump.

2.2. Installation instruction

2.2.1. Location and size

⚠ To avoid air recirculation, the heat pump should be installed in a place with good ventilation or should reserve sufficient space for installation and maintenance. Please refer to the schema below:

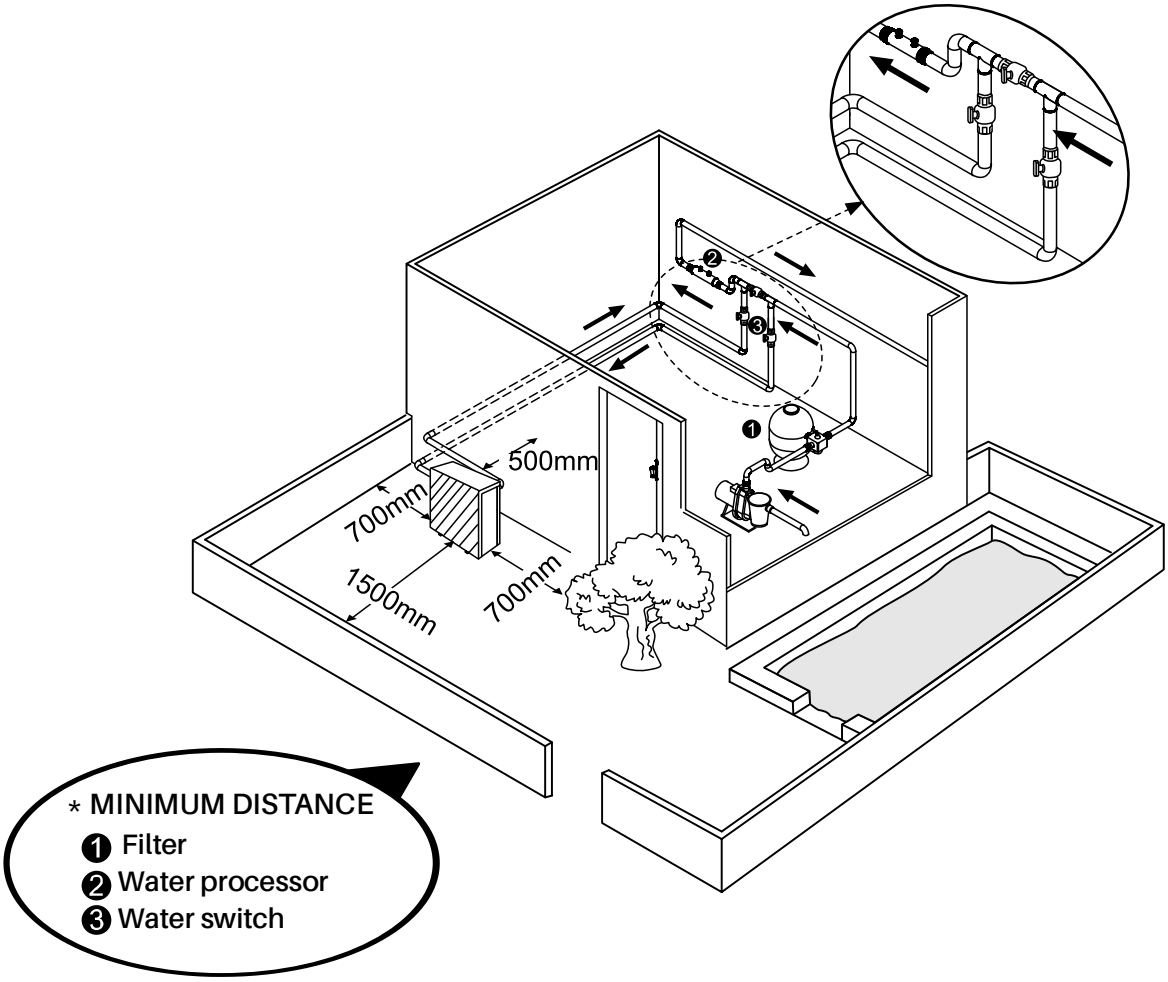

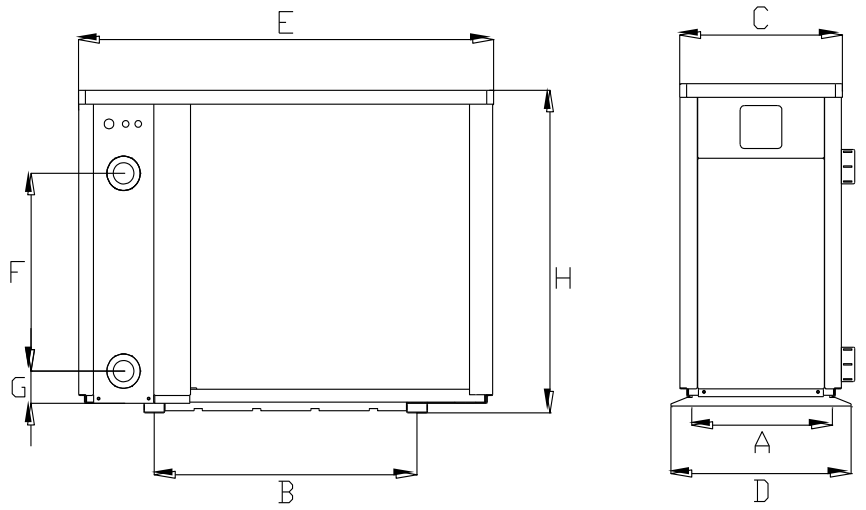

	UNIT=MM	A	B	C	D	E	F	G	H
Model	VPROPLUS 11	402	539	389	432	910	300	73	660
	VPROPLUS 14	402	574	389	432	945	340	73	660
	VPROPLUS 18	402	674	389	432	1045	380	73	660
	VPROPLUS 21	402	824	389	432	1195	470	73	760
	VPROPLUS 26	511	700	498	536	1072	550	73	956
	VPROPLUS 32	511	891	498	536	1264	570	73	956
	VPROPLUS 40T	511	991	498	536	1364	670	73	956

※ Above data is subject to modification without notice.

2.2.2. Heat pump installation.

- The frame must be fixed by bolts (M10) to concrete foundation or brackets. The concrete foundation must be solid; the bracket must be strong enough and anti-rust treated;
- The heat pump needs a water pump (Supplied by the user). The recommended pump specification-flux: refer to Technical Parameter, Max. lift ≥10m
- When the heat pump is running, there will be condensation water discharged from the bottom, please pay attention to it. Please insert the drainage tube (accessory) into the hole and clip it well, then connect a pipe to drain off the condensation water.

2.2.3. Wiring and protecting devices and cable specification

- Connect to appropriate power supply, the voltage should comply with the rated voltage of the products.
- Well earth the heat pump.
- Wiring must be connected by a professional technician according to the circuit diagram.
- Set breaker or fuse according to the local code (leakage operating current ≤ 30mA).
- The layout of power cable and signal cable should be orderly and not affecting each other. Considering the environmental conditions (ambient temperature, direct sunlight, rain, grid voltage, cable length, etc.), the cross-sectional area of the cable can be appropriately increased.

1. Connecting your power wire

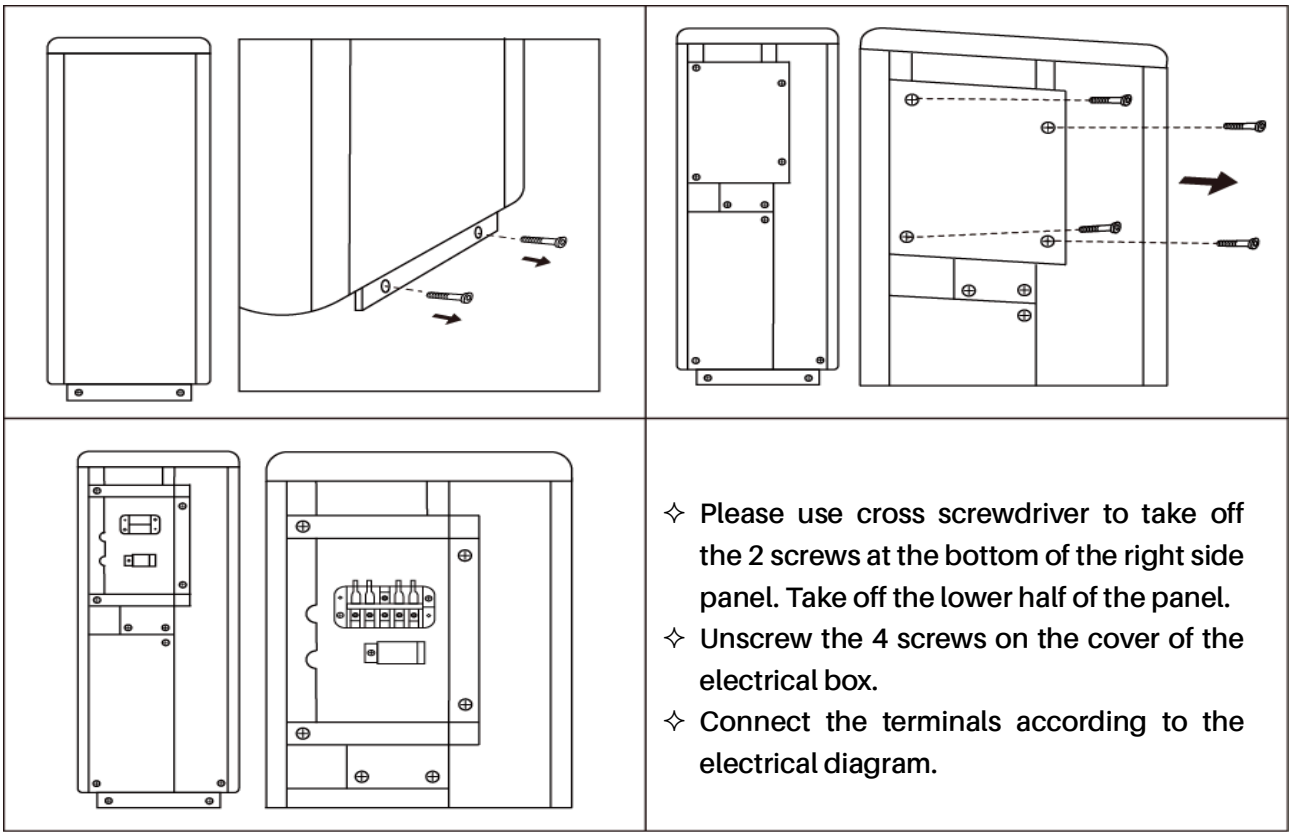

- Please use cross screwdriver to take off the 2 screws at the bottom of the right side panel. Take off the lower half of the panel.
- Unscrew the 4 screws on the cover of the electrical box.
- Connect the terminals according to the electrical diagram.

2. Wiring diagram

A. For power supply: 230V 50Hz

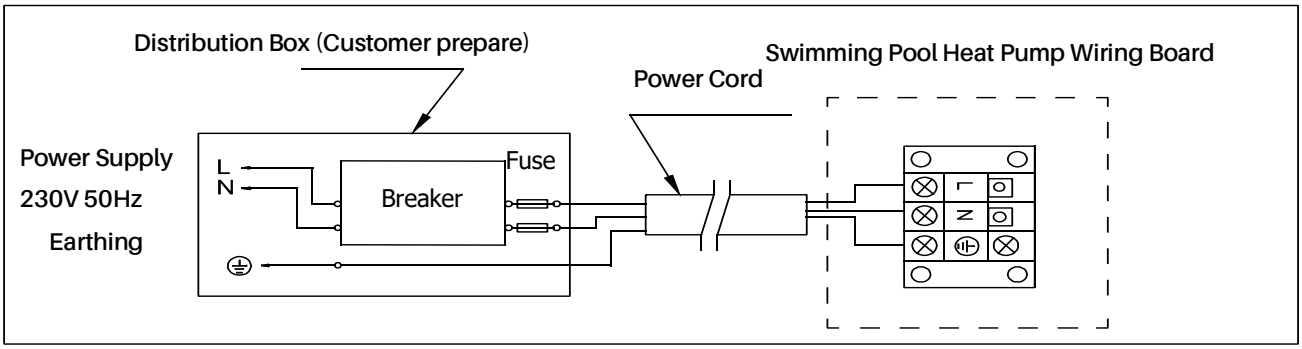

B. For power supply: 400V 50Hz

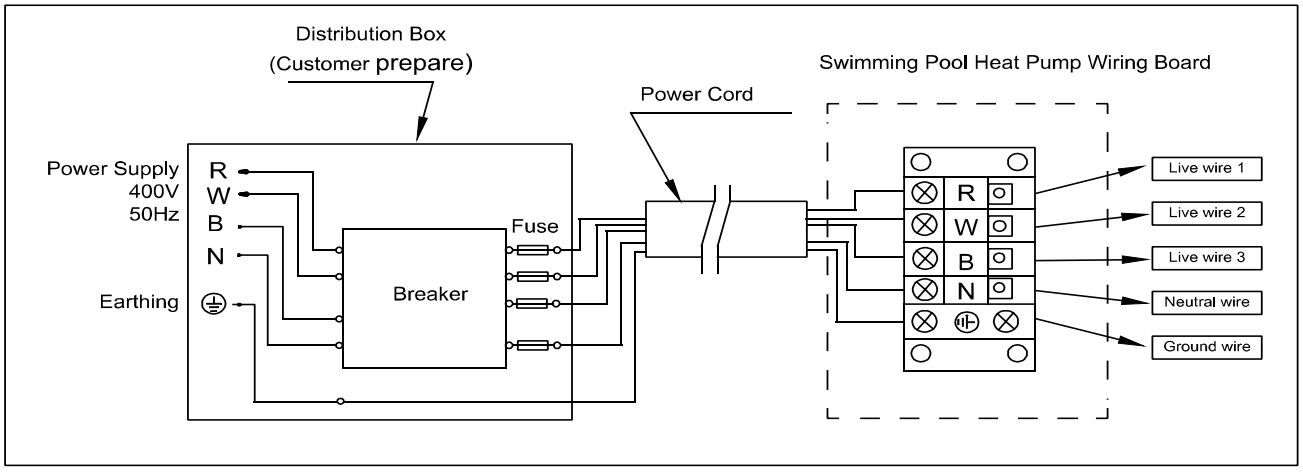

- For your safe use in winter, it's strongly recommended to equip heating priority function.
- For the detailed wiring diagram, please refer to Appendix 1.

3. Options for protecting devices and cable specification

MODEL		VPROPLUS 11	VPROPLUS 14	VPROPLUS 18	VPROPLUS 21	VPROPLUS 26	VPROPLUS 32	VPROPLUS 40T
Breaker	Rated Current (A)	12	15	20	22.5	24.5	28.5	15
	Rated Residual Action Current (mA)	30	30	30	30	30	30	30
Max input current (A)		10	12.5	16.5	18.5	20.5	24	12.5
Fuse (A)		10	15	20	22.5	24.5	28.5	15
Power Cord (mm^2)		10A Plug	15A Plug	3×2.5	3×4	3×4	3×6	5×2.5
Signal cable (mm^2)		3×0.5	3×0.5	3×0.5	3×0.5	3×0.5	3×0.5	3×0.5

NOTE: The above data is adapted to power cord ≤ 5m.If power cord is ＞5m, wire diameter must be increased. The signal cable can be extended to 50m at most.

3.1. Trial after installation

⚠ Please check all the wirings carefully before turning on the heat pump.

3.1.1. Inspection before use

- Check installation of the whole heat pump and the pipe connections according to the pipe connecting drawing;
- Check the electric wiring according to the electrical wiring diagram and earthing connection;
- Make sure that the main power is well connected;
- Check if there is any obstacle in front of the air inlet and outlet of the heat pump

3.1.2. Trial

- Water pump should start before the heat pump, and turn off after the heat pump for long life.
- After the water pump starts, please make sure no leakage of water. Then power on and press the ON/OFF button of the heat pump, and set desired temperature.
- In order to protect the heat pump, the heat pump is equipped with start delay function. When starting the heat pump, the fan will start to run in 3 minutes, in another 30 seconds, the compressor will start to run.
- After pool heat pump starts up, check for any abnormal noise from the heat pump.
- Check the temperature setting.

3.2. Maintenance and winterizing

3.2.1. Maintenance

⚠ The maintenance should be carried out once per year by qualified professional technician.

- Cut off power supply of the heat pump before cleaning, examination and repairing . Do not touch the electronic components until the LED indication lights on PC board turn off.

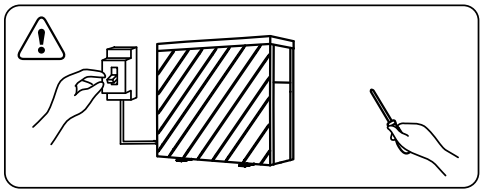

- Please clean the evaporator with household detergents or clean water, NEVER use gasoline, thinners or any similar fuel.
- Check bolts, cables and connections regularly.

3.2.2. Winterizing

In winter season when you don't swim, please cut off power supply and drain water out of the heat pump. When using the heat pump under 2°C / 36°F, make sure there is always water flow.

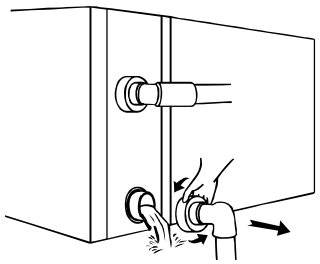

⚠ **Attention**

Unscrew the lower water union of inlet pipe to let the water flow out. When the water in machine freezes in winter season, the titanium heat exchanger may be damaged.

3. TROUBLE SHOOTING FOR COMMON FAULTS

FAILURE	REASON	SOLUTION
Heat pump doesn't run	No power	Wait until the power recovers
	Power switch is off	Switch on the power
	Fuse burned	Check and change the fuse
	The breaker is off	Check and turn on the breaker
Fan running but with insufficient heating	evaporator blocked	Remove the obstacles
	Air outlet blocked	Remove the obstacles
	3 minutes start delay	Wait patiently
Display normal, but no heating	Set temp. too low	Set proper heating temp.
	3 minutes start delay	Wait patiently
If above solutions don't work, please contact your installer with detailed information and your model number. Don't try to repair it yourself.		

ATTENTION ! Please don't try to repair the heat pump by yourself to avoid any risk.

4. FAILURE CODE

NO.	DISPLAY	NOT FAILUREDESCRIPTION
1	E3	No water protection
2	E5	Power supply excesses operation range
3	E6	Excessive temp difference between inlet and outlet water (Insufficient water flow protection)
4	Eb	Ambient temperature too high or too low protection
5	Ed	Anti-freezing reminder
6	OFF	Customer Control Switch DIN2 Disconnect
NO.	Display	Failure description
1	E1	High pressure protection
2	E2	Low pressure protection
3	E4	Phases lack protection (three phase model only)
4	E7	Water outlet temp too high or too low protection
5	E8	High exhaust temp protection
6	EA	Evaporator overheat protection (only at cooling mode)
7	P0	Controller communication failure
8	P1	Water inlet temp sensor failure
9	P2	Water outlet temp sensor failure
10	P3	Gas exhaust temp sensor failure
11	P4	Heating (Evaporator) coil pipe temp sensor
12	P5	Gas return temp sensor failure
13	P6	Cooling (Titanium heat exchanger) coil pipe temp sensor
14	P7	Ambient temp sensor failure
15	P8	Cooling plate sensor failure
16	P9	Current sensor failure
17	PA	Restart memory failure
18	F1	Compressor drive module failure
19	F2	PFC module failure
20	F3	Compressor start failure
21	F4	Compressor running failure
22	F5	Inverter board over current protection
23	F6	Inverter board overheat protection
24	F7	Current protection
25	F8	Cooling plate overheat protection
26	F9	Fan motor failure
27	Fb	Capacitor no charging protection
28	FA	PFC module over current protection
29	8888	Communication failure

APPENDIX 1: HEATING PRIORITY WIRING DIAGRAM (OPTIONAL)

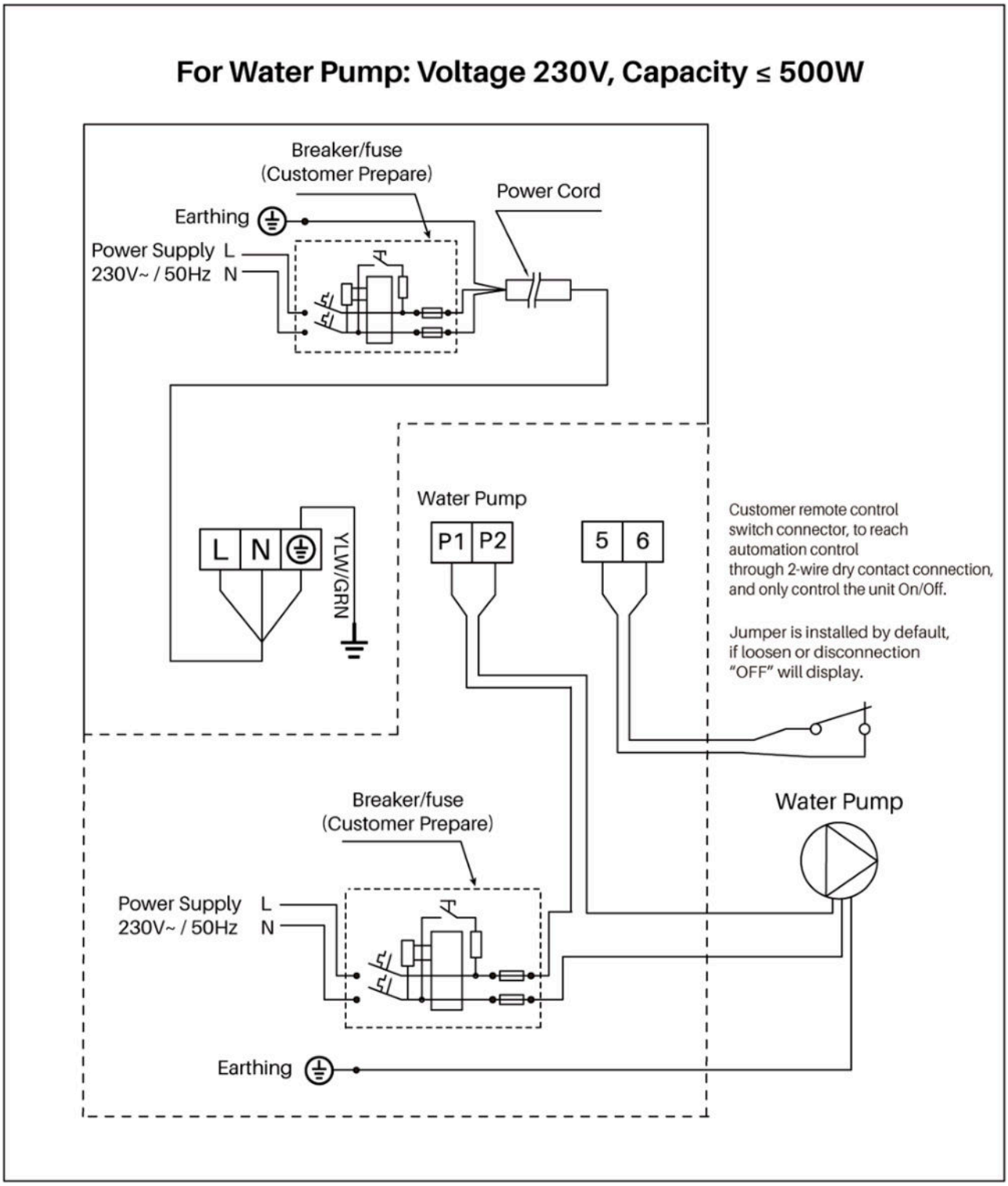

APPENDIX 2: HEATING PRIORITY WIRING DIAGRAM (OPTIONAL)

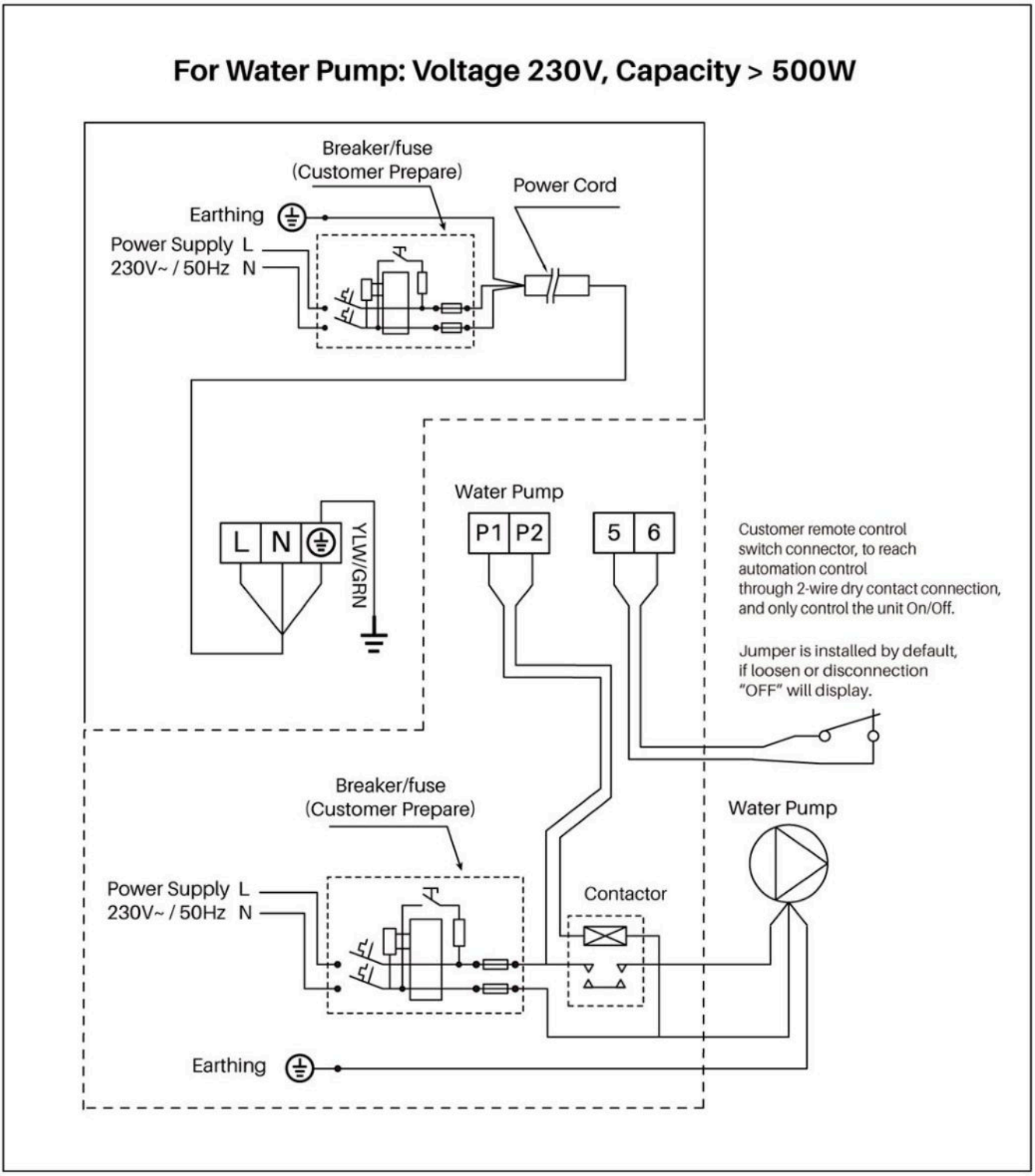

APPENDIX 3: HEATING PRIORITY WIRING DIAGRAM (OPTIONAL)

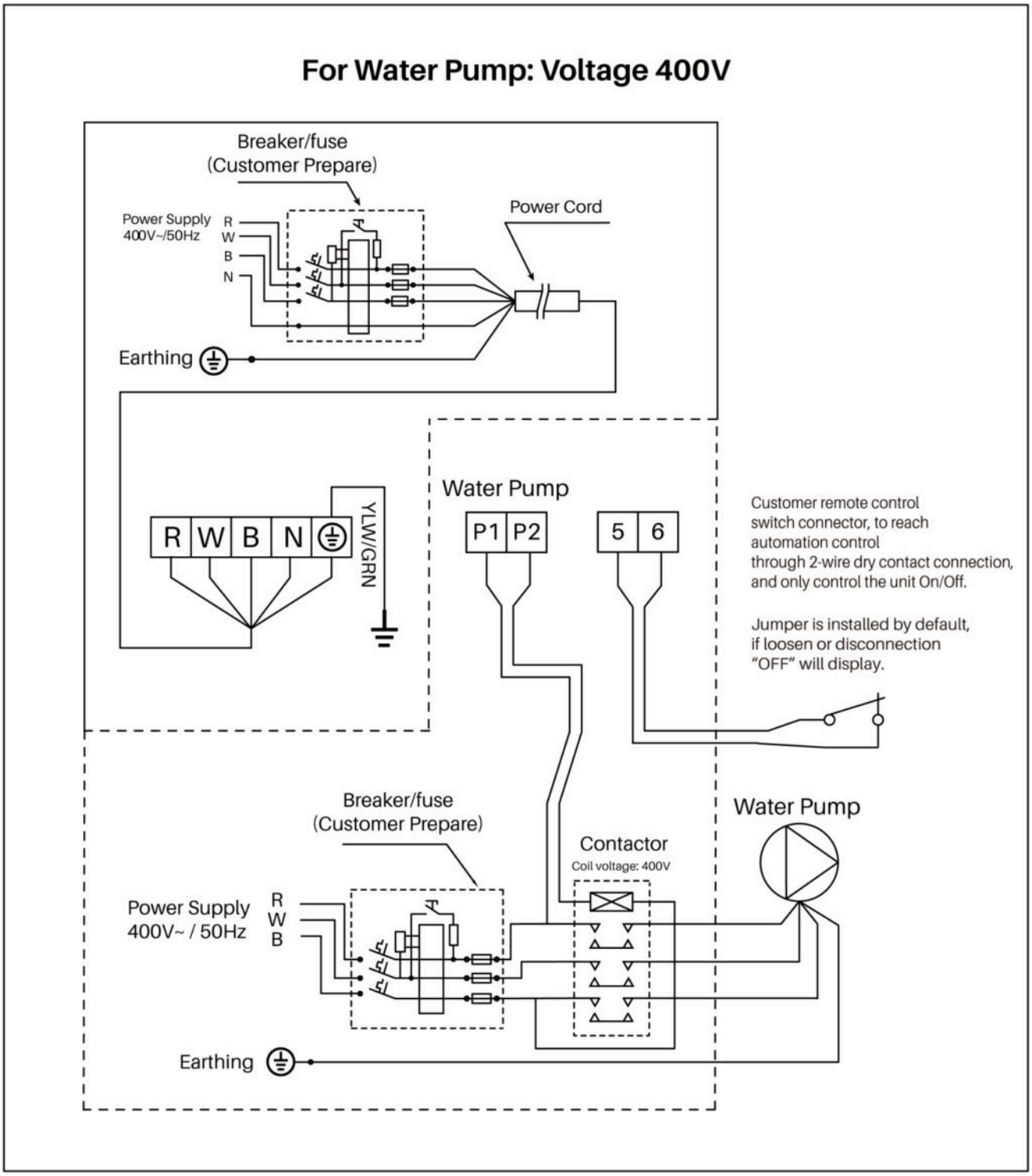

Parallel connection with filtration timer

If the user wants to connect the water pump timer, the installer should connect water pump timer and water pump wiring of heat pump in parallel. So that water pump can start when water pump timer or water pump wiring of heat pump is connected, and water pump will only be switched off when both are disconnected at the same time.

5. WI-FI SETTING

5.1. APP Download

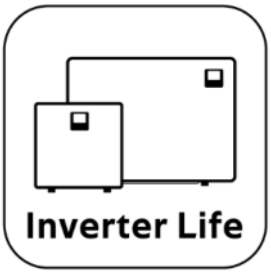

Android Mobile please download from iPhone please download from

5.2. Account registration

a) Registration by Cell phone number/Email

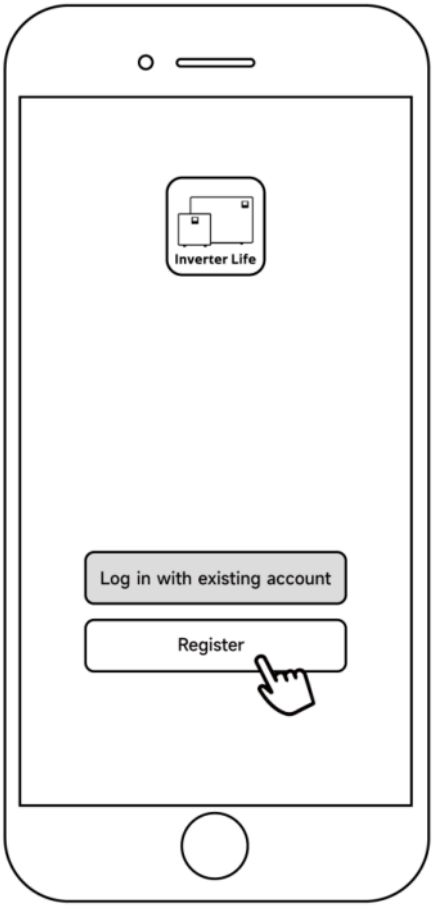

b) Cell phone number registration

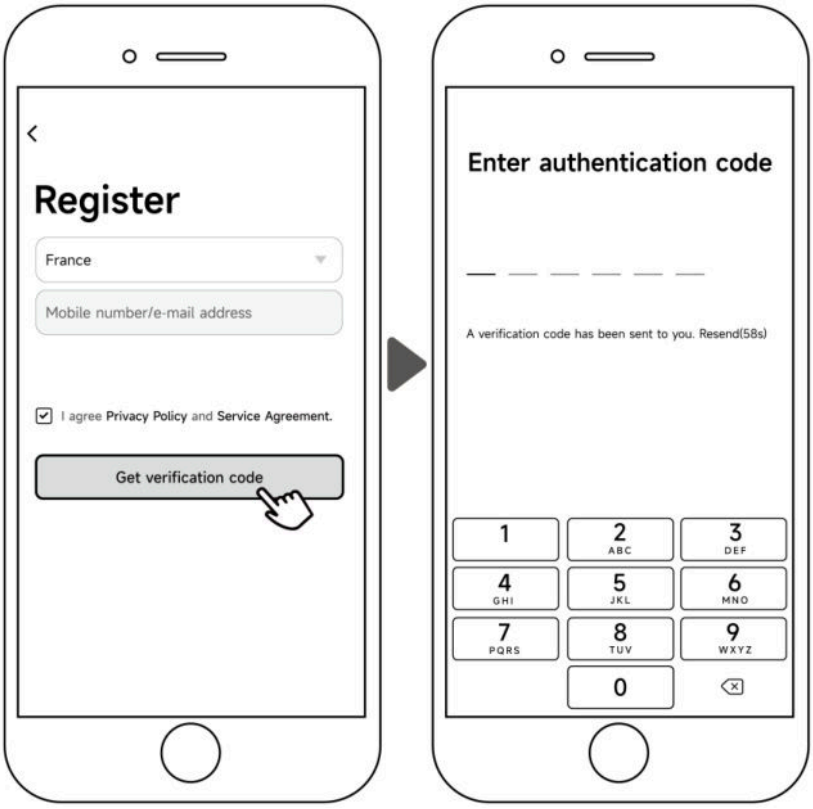

5.3. Create family

Please set a name for the family and choose the room of the device.

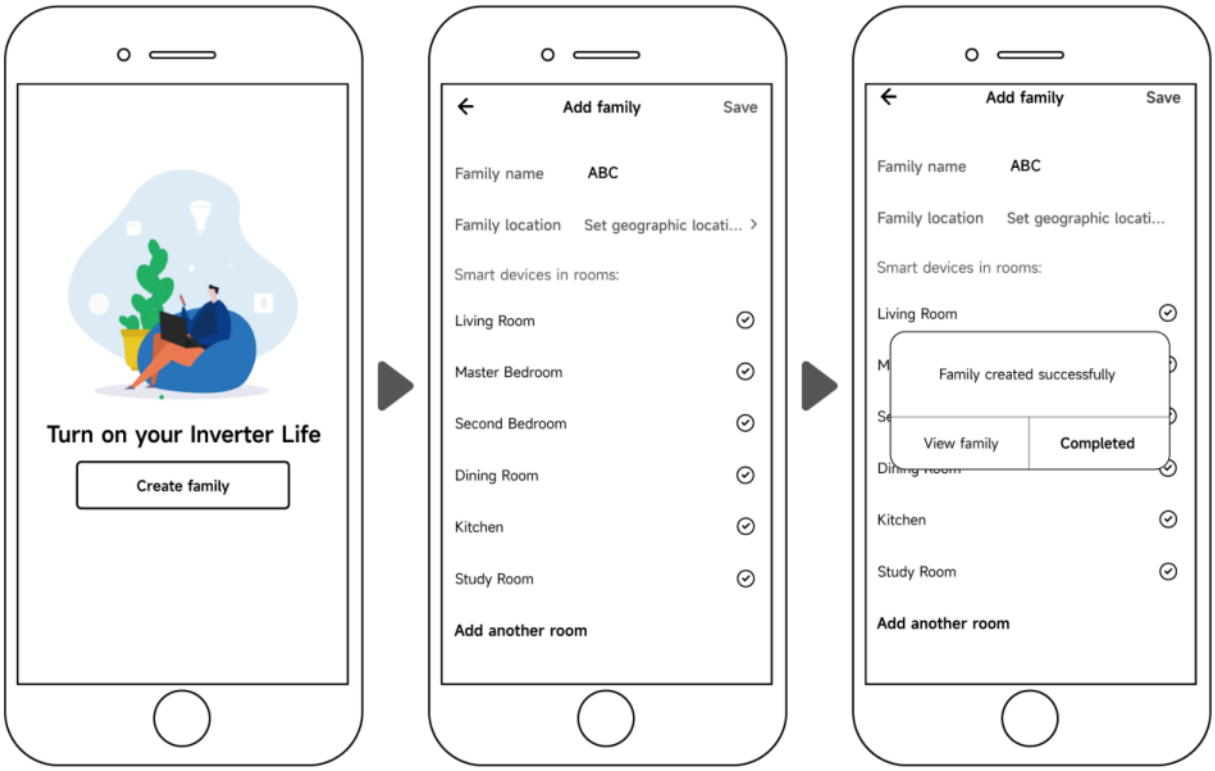

5.4. Three methods of device binding

Please connect your phone to the Wi-Fi network first.

5.4.1. Auto Discovery (Bluetooth)

a) Please make sure the Bluetooth function is enabled on your phone.

b) Press ⏻ for 3 seconds after the screen unlock, ᯤ will be flashing rapidly to enter Wi-Fi binding status.

c) Click "Add Device", wait for the app to search for the device and then click “add”, then follow the instructions below to finish the device binding.

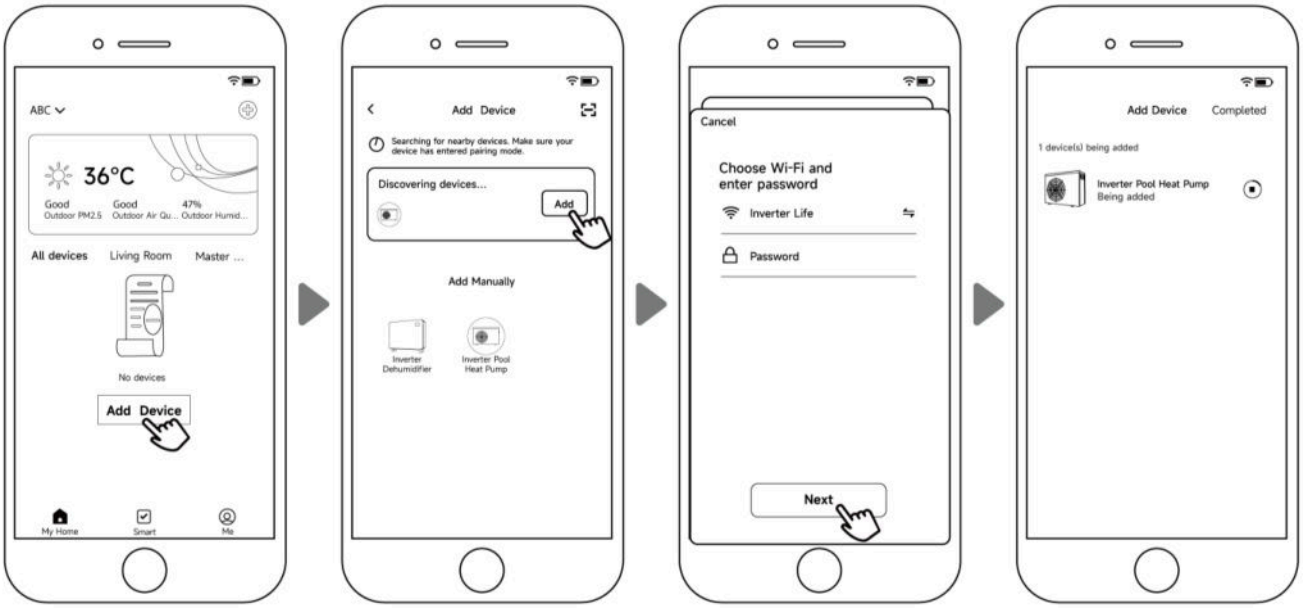

Note:

1. It will take some time to scan, please be patient.
2. Only Wi-Fi modules with Bluetooth functions can use this method.

5.4.2. EZ Mode (Easy-connect)

a) Activate the Wi-Fi module

Press ⏻ for 3 seconds after the screen unlocks, 📶 will be flashing rapidly to enter Wi-Fi binding status.

b) Click "Add device", and follow the instructions below to finish binding. 📶 display on the screen once the Wi-Fi connection success.

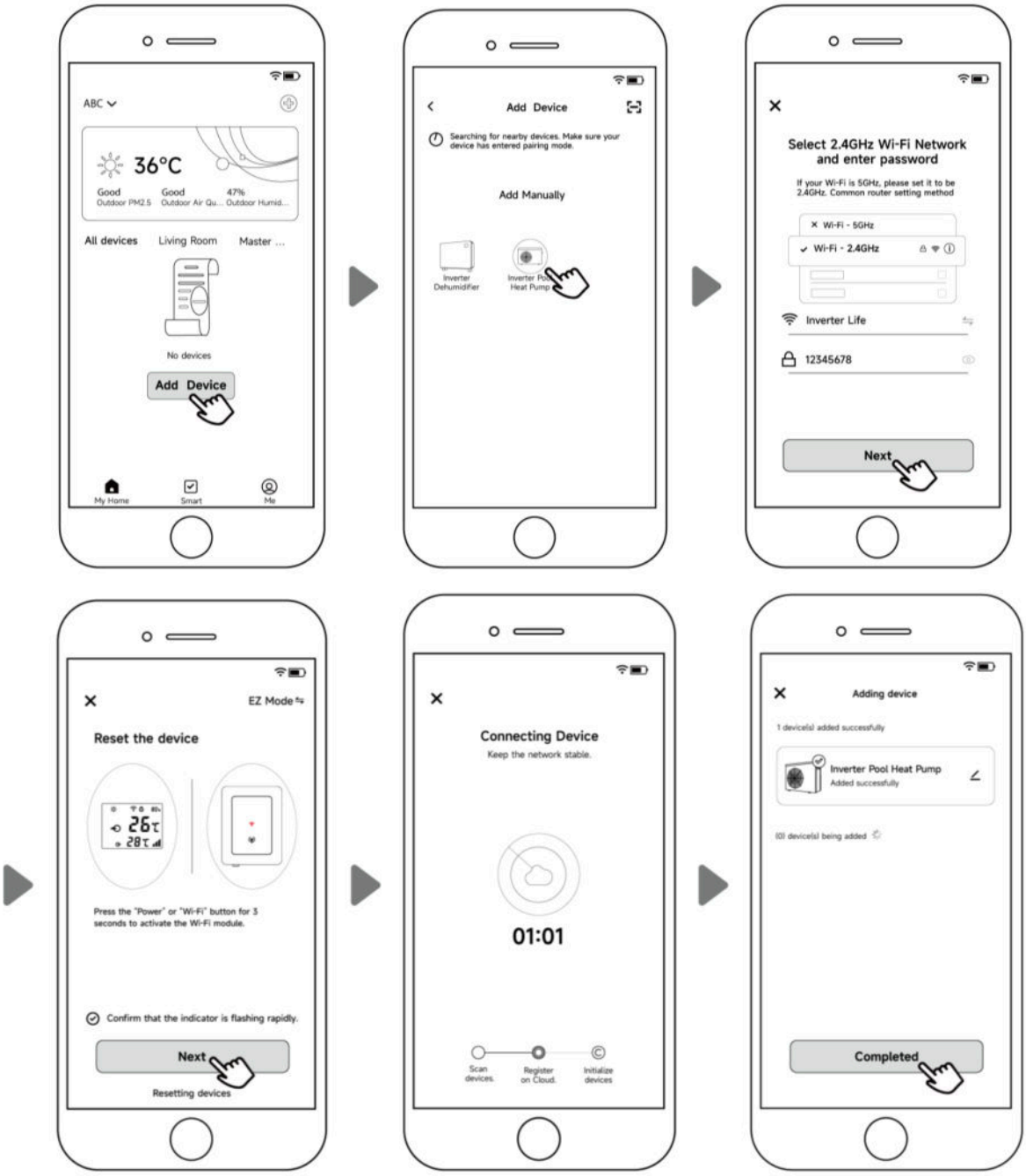

Note: After allowing the APP to locate, it can read the Wi-Fi name automatically.

5.4.3. AP Mode

Activate Wi-Fi module

a) Press ⏻ for 10 seconds after the screen unlock, ᯤ will be flashing slowly to enter Wi-Fi binding status.

b) Click "Add device", and follow the instructions below to finish binding. ᯤ display on the screen once the Wi-Fi connection success.

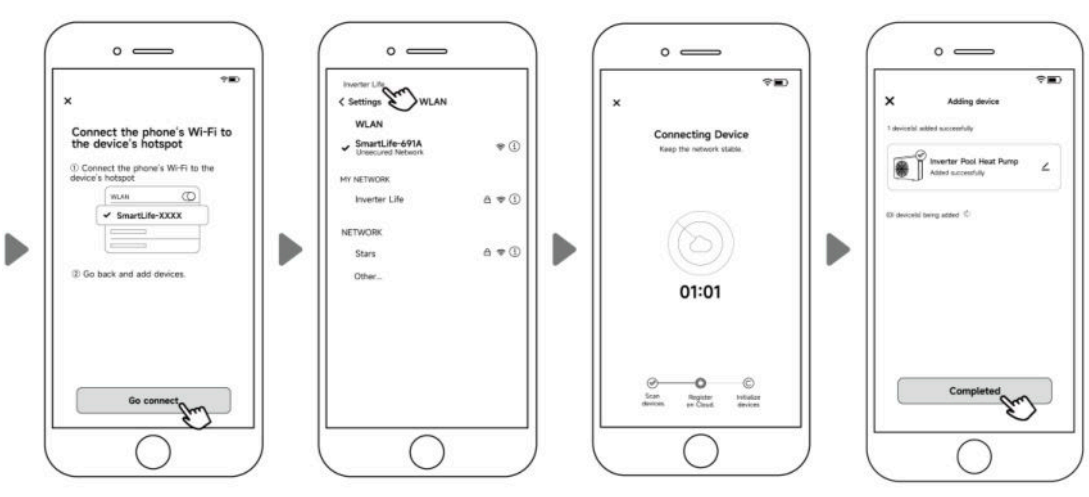

Note: If it doesn't jump automatically, click "Confirm hotspot connection, next".

5.4.4. If connect fails, please make sure your network name and password are correct. And your router, mobile phone and device are as close as possible.

5.4.5. Wi-Fi rebinding (When Wi-Fi password changes or network configuration changes)

Press ⏻ for 10 seconds, ᯤ will be flashing slowly for 60 seconds. Then ᯤ will be off. The original binding will be removed. Follow steps above for rebinding.

Remarks: Please make sure the router is configured at 2.4 GHz.

5.5. Operation instructions

The following instructions are for heat pumps with heating and cooling functions.

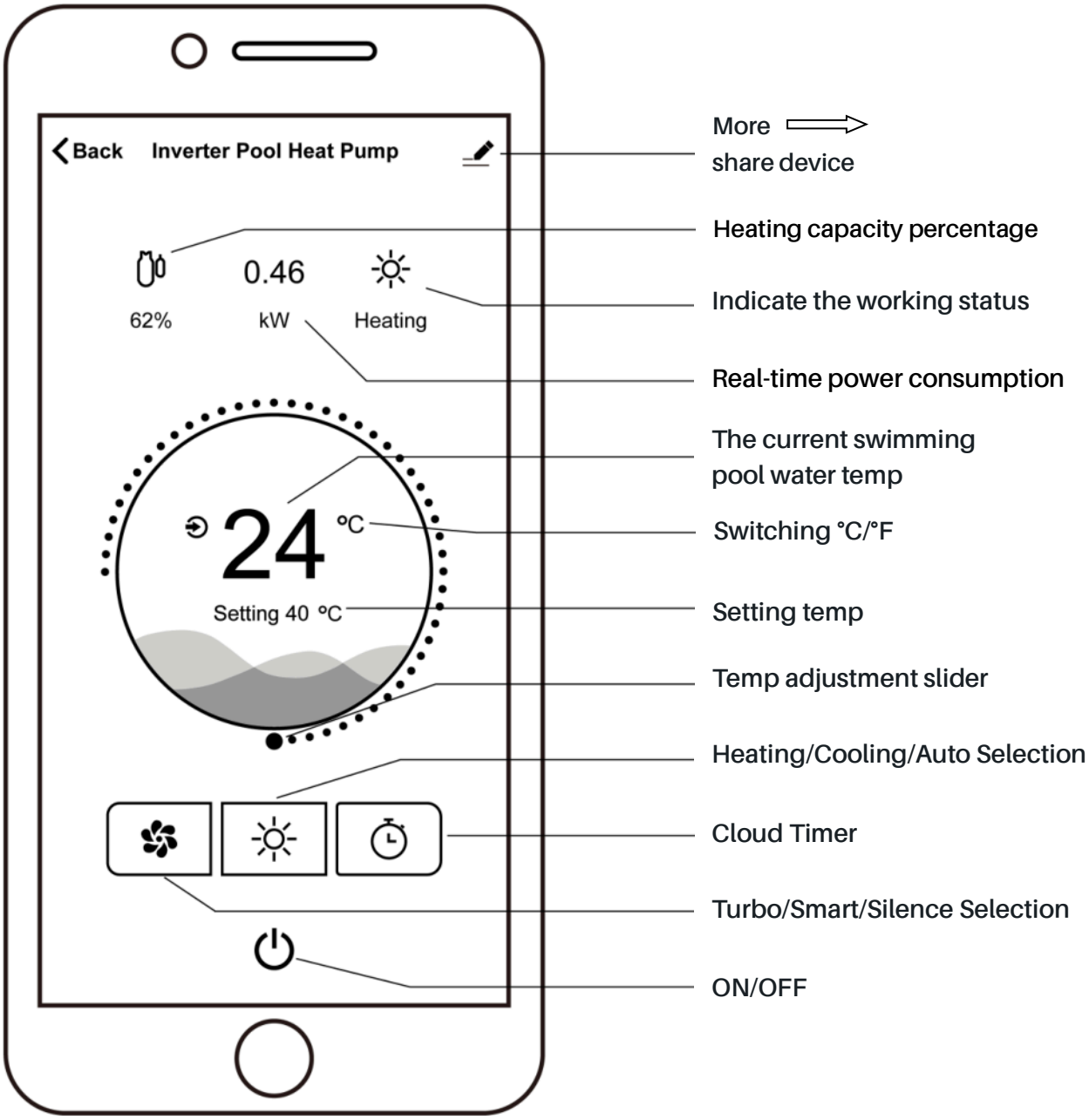

5.6. Share devices with your family members

After binding, if your family members also want to control the device.

Please let your family members register the APP first, and then the administrator can operate as below (The following pictures are for reference only):

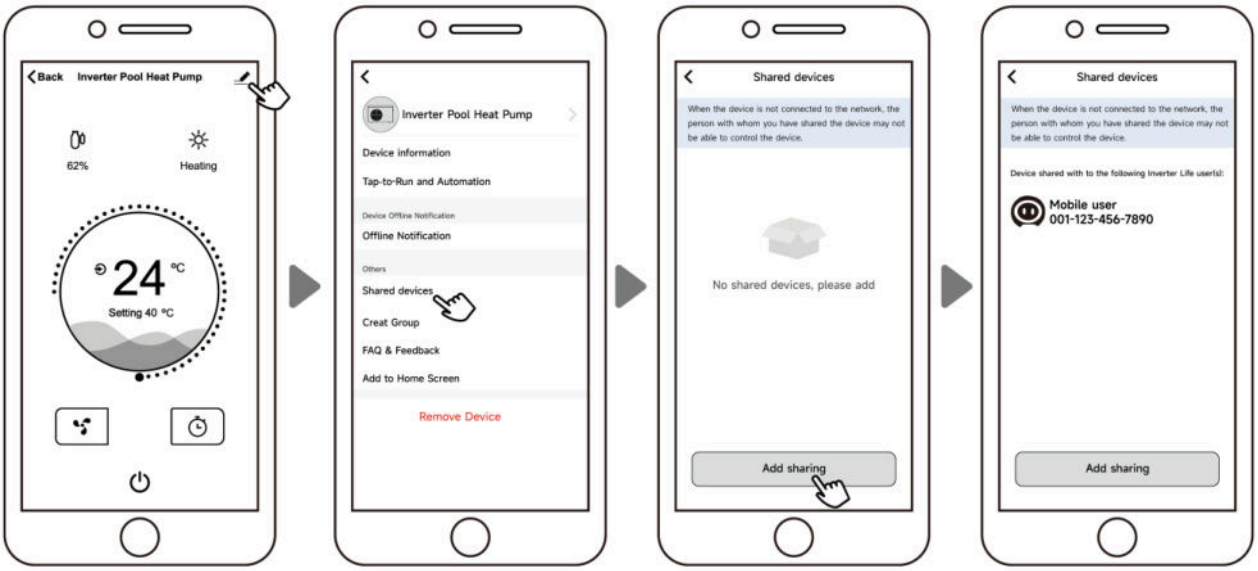

Then your family members will see this heat pump once they log in to the APP.

Notice: 1. The weather forecast is just for reference.

2. APP is subject to update without notice.

HEATSEEKER
VORTEX
LINK

OPERATION & INSTALLATION INSTRUCTIONS

DESCRIPTION

An all in one system for autonomous control of heat pumps in line with the filtration system. This unit permits the heat pump to run outside of filtration hours set by sanitation timers allowing for full automatic heat demand.

OPERATION

The VortexLink is designed to switch a 240Vac pump rated to 10 Amps 2400 watts from the switch inputs. This unit is designed to be connected to a chlorinator and the outputs from heat pumps. VortexLink is fitted with an LCD screen which displays whether the pump is on and whether the chlorinator or heat pump is demanding the pump to be operating.

HEAT DEMAND

A heating device, whatever it is, is designed to heat the pool water only when the water circulates. Most of the time, a pool is filtered between 6 and 8 hours a day. But such a time can't be sufficient sometimes to maintain the water at the desired temperature, depending on the seasons. This is the reason why the heat pump is equipped with the "sample" function that will manage the temperature of the pool. Every hour (times vary depending on the heat pump model) the filtration pump is started for 5 minutes. If after 5 minutes, the temperature of the water is above the required temperature, the filtration turns off for one more hour. Otherwise, the filtration and the heat pump are going to keep on operating until the desired temperature is reached.

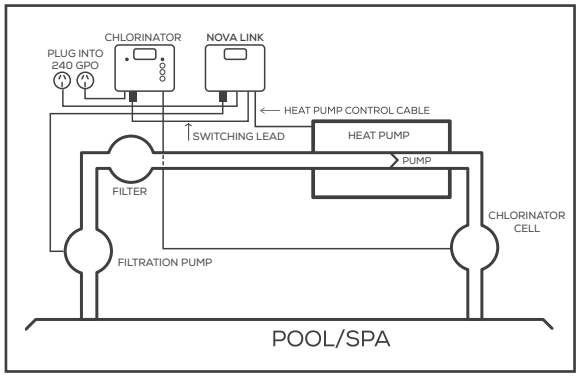

INSTALLATION INSTRUCTIONS

Mounting

Find a suitable location to mount the VortexLink box. Ideally, as with all pool equipment, it should be installed out of direct weather and no closer than 3m from the water's edge and a minimum 600mm above ground. Fix the mounting bracket to a solid structure and slide the VortexLink on, keeping in mind that the power cable is 1.8m long and should be plugged directly into a general power outlet, not into an extension lead.

Pump

The filtration pump plugs into the 240V outlet beneath the VortexLink.

Heating Demand

Connect the heat pump control cable from the VortexLink to the heat pump, refer to the heat pump manufacturer's instructions and the below diagram for the appropriate connection and note that damage caused by incorrect connections will void warranties.

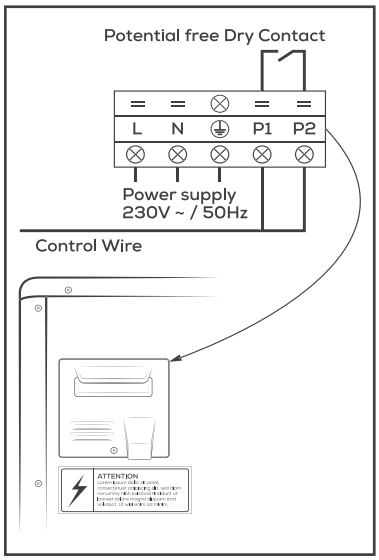

HEATSEEKER
VORTEX
SWITCH

OPERATION & INSTALLATION INSTRUCTIONS

DESCRIPTION

A plug and play option for heat pump systems with independent circulation pumps. Can be fitted during the installation of the heat pump.

OPERATION

The VortexSwitch is designed to switch a 240Vac pump maximum rated to 9.98 Amps 2395 watts from the switch inputs. This unit is designed to be plugged into a general power outlet and the heating priority connections on the heat pump.

HEATING PRIORITY

The heat pump is designed to heat or cool the water of the pool only when the water circulates through it. By connecting the VortexSwitch to the heat pump, and then the circulation pump to the VortexSwitch, the heat pump will control when the circulation pump is run. This system allows the heat pump to maintain the set-point temperature in either heating or cooling mode.

Every 60 minutes, the circulation pump is started for 2 minutes to sample the water temperature. If after 2 minutes, the temperature of the water is below/above the required set-point temperature (depending if in heating or cooling mode), the circulation pump will be turned off for a further 60 minutes before sampling the water temperature again.

If the heat pump senses that the water has cooled/heated below/above the temperature set-point, the circulation pump and the heat pump will continue to operate until the desired set-point temperature is reached.

By following the instructions in the heat pump instruction manual, setting a start and stop time will ensure that the heat pump is not sampling the water temperature and running throughout the night if running noise is a factor.

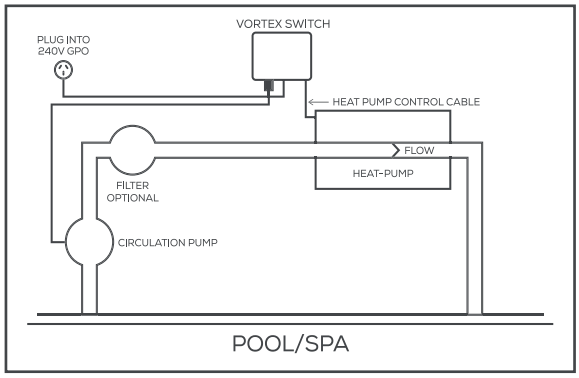

INSTALLATION INSTRUCTIONS

Mounting

Find a suitable location to mount the VortexSwitch box. Ideally as with all pool equipment it should be installed out of direct weather and no closer than 3m from the water's edge and a minimum of 600mm above ground. Lift up the two mounting tabs and use two appropriate screws to mount the VortexSwitch box to the wall, keeping in mind that the power cable is 1.8m long and should be plugged directly into a general power outlet, not into an extension lead.

Pump

The circulation pump plugs into the 240V outlet beneath the VortexSwitch.

Heating Priority

Connect the heating priority cable from the VortexSwitch to the heat pump, refer to the heat pump manufacturer's instructions and the below diagram for the appropriate connection and note that damage caused by incorrect connections will void warranties.

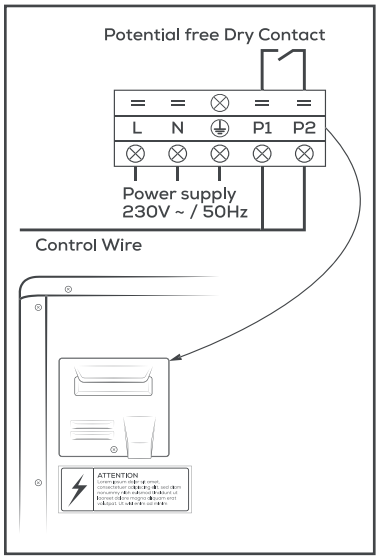

Thank you for choosing TurboSilence Inverter.

The factory reserves the final interpretation right.

And keep the right to stop or change product specification and design without prior notice at any time, no need to bear the resulting obligations.

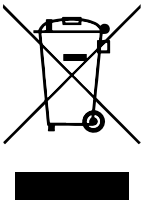

Version: Gd3XPr32

Manufacturer's Warranty

VProPlus Heat Pump Warranty

This manufacturer's warranty is provided by Supreme Solar Pty Ltd, trading as Supreme Heating. It is provided in addition to your rights and remedies under the Australian Consumer Law.

Australian Consumer Law

Our goods come with guarantees that cannot be excluded under the Australian Consumer Law. You are entitled to a replacement or refund for a major failure and compensation for any other reasonably foreseeable loss or damage. You are also entitled to have the goods repaired or replaced if the goods fail to be of acceptable quality and the failure does not amount to a major failure. This warranty is provided in addition to, and does not limit or replace, your rights under the Australian Consumer Law.

Warranty Period

Component	Warranty Period
Titanium Heat Exchanger (Against Corrosion)	30 Years
Heat Exchanger Casing	2 Years
Compressor	10 Years
Parts	5 Years
Installation Workmanship	12 Months
Demonstration / Refurbished Units	12 Months

Warranty Coverage

During the applicable warranty period, Supreme Solar Pty Ltd warrants that the that the heat pump will be free from defects in materials and workmanship when installed, operated and maintained in accordance with this manual.

Where a valid warranty claim is accepted, Supreme Solar Pty Ltd may, at its discretion:

- repair the product;
- replace the defective component;
- replace the product with an equivalent model; or
- reimburse the reasonable cost of an approved repair.

Labour Warranty

Installation workmanship and in-field labour are covered for a period of 12 months where installation has been completed by Supreme Heating or an authorised installer. Labour, travel and freight costs incurred after the labour warranty period are the responsibility of the original purchaser unless otherwise required under the Australian Consumer Law.

Warranty Exclusions

- Misuse, abuse, neglect or accidental damage.
- Incorrect installation or installation by an unqualified person.
- Failure to follow installation, operation or maintenance instructions.
- Poor pool or spa water chemistry.
- Vermin or insect infestation.
- Lightning, flood, fire or other natural events.
- Corrosion caused by environmental conditions.
- Unauthorised repairs or modifications.
- Damage during transport after delivery.
- Routine maintenance items.
- No Fault Found service calls.
- Labour, travel and freight costs outside the stated labour warranty period.

Owner Responsibilities

The owner is responsible for ensuring the heat pump is correctly installed, operated and maintained in accordance with this manual and that recommended pool water chemistry is maintained. Failure to maintain the product in accordance with this manual may void this warranty.

Making a Warranty Claim

If you believe your product has developed a fault covered by this warranty, contact your original supplier or Supreme Heating as soon as the fault becomes apparent. To assist with processing your claim, you may be asked to provide:

- proof of purchase
- installation date
- model and serial number
- description of the fault
- photographs if requested

Contact

Supreme Heating
A trading name of Supreme Solar Pty Ltd

2/19 Enterprise Drive
Bundoora VIC 3083 Australia
Phone: 1300 787 978
Email: info@supremeheating.com.au
Website: www.supremeheating.com.au

SUPREME
HEATING
POOL HEATING SINCE 1990

Ph: 1300 787 978
supremeheating.com.au